HORIZONTAL DEFLECTION

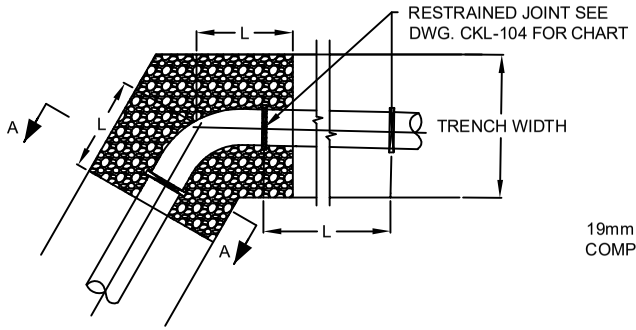

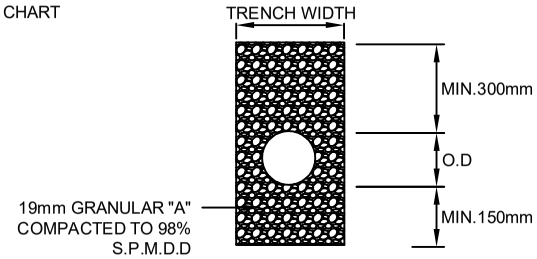

VERTICAL DEFLECTION

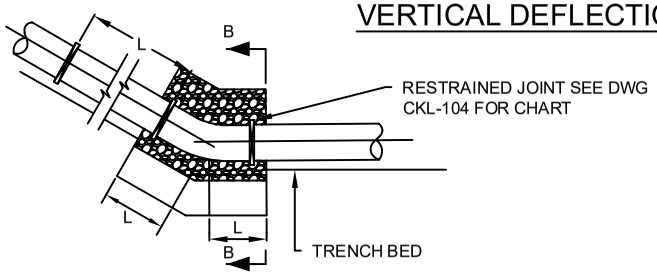

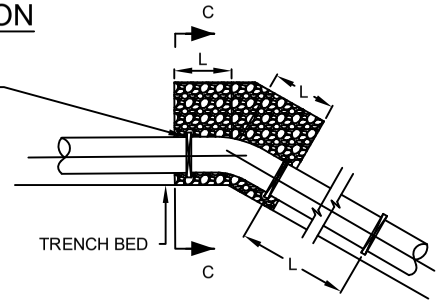

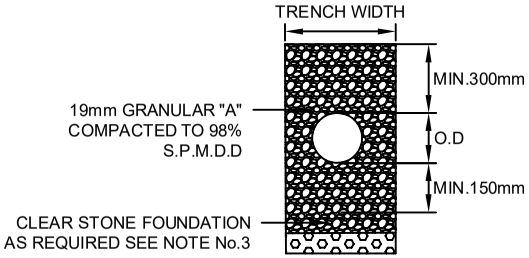

SECTION B-B

DOWNWARD THRUST

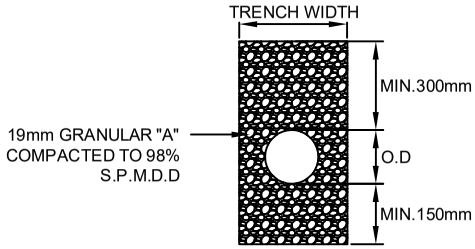

SECTION C-C

UPWARD THRUST

NOTES:

1. ALL JOINTS ENCOUNTERED WITHIN THE SPECIFIED RESTRAINING LENGTH "L" SHALL BE RESTRAINED ON EACH SIDE OF THE FITTING.
2. MINIMUM RESTRAINING LENGTH (L) AS PER CKL-104.
3. GRANULAR SHALL BE FULLY EXTENDED TO AND COMPACTED AGAINST TRENCH WALLS. ADEQUATE BEARING CAPACITY OF TRENCH BED TO BE CONFIRMED BY ENGINEER. ADDITIONAL DETAIL SHALL BE PROVIDED IF ADDITIONAL MEASURES ARE TO BE TAKEN.
4. ALL JOINTS SHALL BE RESTRAINED IN ENGINEERED FILL APPLICAITONS

S.P.M.D.D.= SPECIFIC PROCTOR MOISTURE DRY DENSITY

JOINT RESTRAINT LENGTH FOR PVC PIPE IN COMBINATION WITH GRANULAR THRUST BLOCK

REVISIONS

NO.	COMMENTS	BY	DATE	APPROVED BY	APPROVED DATE

CITY OF KAWARTHA LAKES
ENGINEERING AND
CORPORATE ASSETS
322 KENT ST. W, Box 9000, LINDSAY ON. K9V 4T7, (705) 324-9411

DRAWN BY: JN	CHECKED BY:	DATE: 2017/08
APPROVED BY: CS		DATE: 2017/08

Kawartha Lakes

CONTRACT NO:
SCALE: N.T.S
PAGE 1 OF 1
DRAWING NO. CKL-107